VLAN & VTP

Course Code: CSC 3116 Course Title: Computer Networks

Dept. of Computer Science
Faculty of Science and Technology

Lecturer No:	Lab 9	**Week No:**		**Semester:**	Summer 22-23
Lecturer:	*Sharifa Rania Mahmud; rania@aiub.edu*				

Lecture Outline

1. Configuring VLANs
2. VTP Configuration

Configuring VLANs

Introduction

A technique of logically grouping of computers of LAN to limit broadcast domain and improve security.

- Each VLAN must have a LAN number → Valid numbers are 1 to 4094
- Normal VLANS 1 to 1005
  - Stored in in vlan.dat file of Flash memory
  - Normally used
- Extended VLANS 1006 to 4094
  - Stored in running configuration file
  - Limited options
- Factory set VLANs (cannot be changed)
  - VLAN 1 ---Administrative VLAN or default VLAN (for Cisco switch)
  - VLAN 1001 to 1005 used for Token ring and FDDI networks (Not used usually)
- VLAN name is optional [1]

Configuring VLANs….

Creation of VLANs

- All configuration must be done in Global Configuration mode

❖ VLAN Creation

1. # ***enable*** to access privileged exec mode.
2. # ***configure terminal*** to access global configuration mode.
3. # ***vlan 2*** to create VLAN 2 and access VLAN configuration mode.
4. # ***name Production*** to name this VLAN Production.
5. # ***vlan 3*** to create VLAN 3.
6. # ***name HR*** to name this VLAN HR [1].

❖ Verify VLAN creation

show vlan brief

Configuring VLANs….

- Cisco IOS commands for creating four VLANs

```
Switch>enable
Switch#configure terminal
Enter configuration commands, one per line.  End with CNTL/Z.
Switch(config)#VLAN 2
Switch(config-vlan)#name production
Switch(config-vlan)#VLAN 3
Switch(config-vlan)#name HR
Switch(config-vlan)#VLAN 4
Switch(config-vlan)#name sales
Switch(config-vlan)#VLAN 5
Switch(config-vlan)#name IT
Switch(config-vlan)#exit
Switch(config)#
```

Configuring VLANs….

❖ Modes of Interfaces

- Access
  - Used to connect an end device such as PC
- Trunk
  - Used to connect a connecting device such as another switch or a router to carry data for multiple VLANs

Access

Trunk if it is configured to carry data of multiple VLANs

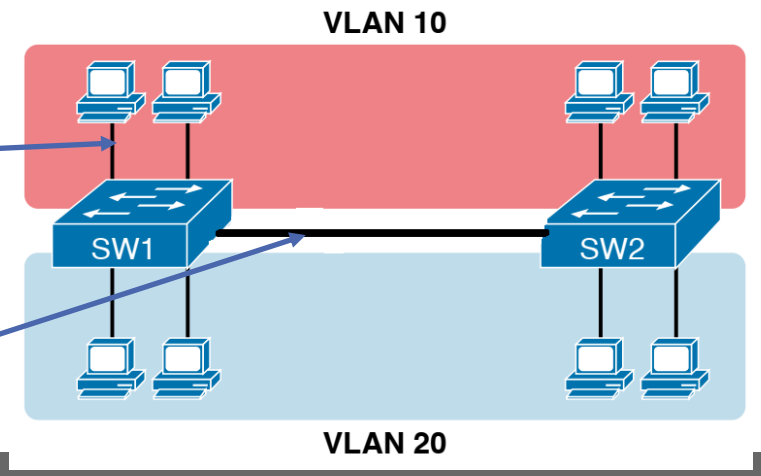

Configuring VLANs….

Topic sub heading..

❖ Adding interface to a VLAN

1. # **enable** to access privileged exec mode.
2. # **configure terminal** to access global configuration mode.
3. # ***interface fa0/1*** to access FastEthernet port 0/1.
4. # ***switchport mode access*** to set this port into a nontrunking access mode.
5. # ***switchport access vlan 2*** to set this port to use VLAN 2.
6. # ***interface fa0/2*** to access FastEthernet port 0/2.
7. # ***switchport mode access*** to set this port into a nontrunking access mode.
8. # ***switchport access vlan 3*** to set this port to use VLAN 3
9. # ***interface fa0/3*** to access FastEthernet port 0/3
10. # ***switchport mode trunk*** to set this port into a trunking mode

Configuring VLANs….

Commands for adding interfaces to a VLAN

```
Switch(config)#interface fa0/1
Switch(config-if)#switchport mode access
Switch(config-if)#switchport access vlan 2
Switch(config-if)#
Switch(config-if)#interface fa0/2
Switch(config-if)#switchport mode access
Switch(config-if)#switchport access vlan 3
Switch(config-if)#
Switch(config-if)#interface fa0/3
Switch(config-if)#switchport mode trunk
Switch(config-if)#
Switch(config-if)#
```

Configuring VLANs….

Verify members of a VLAN

```
Switch#show vlan brief

VLAN Name                             Status    Ports
---- -------------------------------- --------- -------------------------------
1    default                          active    Fa0/4, Fa0/5, Fa0/6, Fa0/7
                                                Fa0/8, Fa0/9, Fa0/10, Fa0/11
                                                Fa0/12, Fa0/13, Fa0/14, Fa0/15
                                                Fa0/16, Fa0/17, Fa0/18, Fa0/19
                                                Fa0/20, Fa0/21, Fa0/22, Fa0/23
                                                Fa0/24, Gig0/1, Gig0/2
2    production                       active    Fa0/1
3    HR                               active    Fa0/2
1002 fddi-default                     active
1003 token-ring-default               active
1004 fddinet-default                  active
1005 trnet-default                    active
Switch#
```

Fa0/3 is not shown as it is a trunk

Configuring VLANs….

Adding multiple interfaces to a VLAN at a time

❖ Adding multiple interfaces to a VLAN at a time

```
Switch(config)#interface range fa0/4-10
Switch(config-if-range)#switchport mode access
Switch(config-if-range)#switchport access vlan 3
```

```
Switch(config)#do show vlan brief

VLAN Name                             Status    Ports
---- -------------------------------- --------- -------------------------------
1    default                          active    Fa0/11, Fa0/12, Fa0/13, Fa0/14
                                                Fa0/15, Fa0/16, Fa0/17, Fa0/18
                                                Fa0/19, Fa0/20, Fa0/21, Fa0/22
                                                Fa0/23, Fa0/24, Gig0/1, Gig0/2
2    production                       active    Fa0/1
3    HR                               active    Fa0/2, Fa0/4, Fa0/5, Fa0/6
                                                Fa0/7, Fa0/8, Fa0/9, Fa0/10
1002 fddi-default                     active
1003 token-ring-default               active
1004 fddinet-default                  active
1005 trnet-default                    active
Switch(config)#
```

Configuring VLANs….

❖ Verifying VLAN Information

Switch# show vlan	Displays VLAN information
Switch# show vlan brief	Displays VLAN information in brief
Switch# show vlan id 2	Displays information about VLAN 2 only
Switch# show vlan name HR	Displays information about VLAN HR only

VTP Configuration

VTP configuration commands

Suppose
SW1: Sever
SW2 & SW3: Client

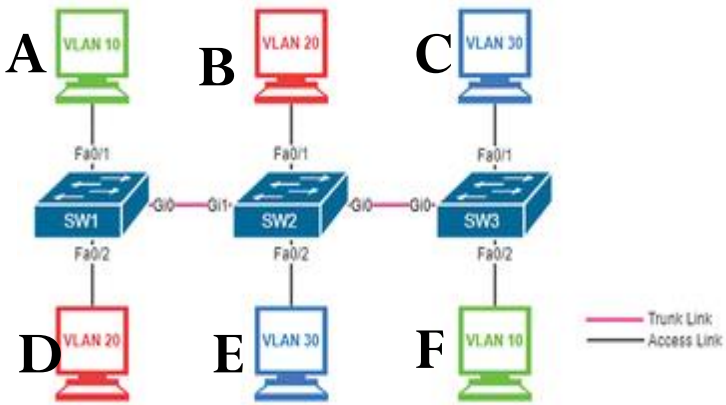

SW1

```
Switch(config)# vtp mode server
Switch(config)# vtp domain aiub
Switch(config)# vtp password 123
```

SW2

```
Switch(config)# vtp mode client
Switch(config)# vtp domain aiub
Switch(config)# vtp password 123
```

SW3

```
Switch(config)# vtp mode client
Switch(config)# vtp domain aiub
Switch(config)# vtp password 123
```

Topic Heading..

VTP configuration verification

❖ Verifying VTP

`Switch# show vtp status`	Displays general information about VTP configuration
`Switch# show vtp counters`	Displays the VTP counters for the switch

router on stick

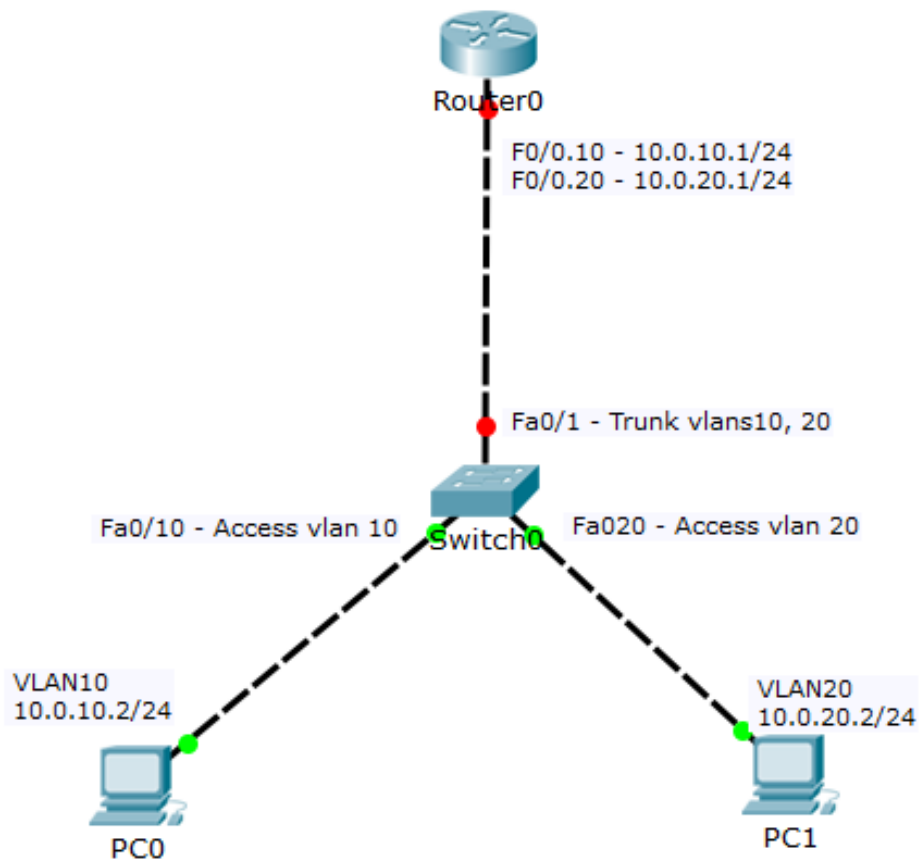

References

[1] D. Liu, *Cisco CCNA/CCENT Exam 640-802, 640-822, 640-816 Preparation Kit*, Syngress Publishing, Inc., 2009, pp. 549-567.

[2] W. Odom, Official Cert Guide CCNA 200-301 Volume 1, Pearson Education, Inc., 2020, USA, p. 181.

Books

1. Official Cert Guide CCNA 200-301 , vol. 1, *W. Odom*, Cisco Press, First Edition, 2019, USA.

2. CCNA Routing and Switching, *T. Lammle*, John Wily & Sons, Second Edition, 2016, USA.